FEDERAL PROJECT	STATE PROJECT	PARISH	SHEET NO.

Opening Dia. in.	Opening No.	Opening Area sq.ft.	H Lgth. ft.in.	E Lgth. ft.in.	C Lgth. ft.in.	J Lgth. ft.in.	D Lgth. ft.in.	L Lgth. ft.in.	M Lgth. ft.in.	S Lgth. ft.in.
60	1	19.6	7- 0	1- 1	0- 8	5- 0	1- 0	19-10	48- 2	1-11
60	2	39.3	7- 0	1- 1	0- 8	5- 0	1- 0	19-10	59- 5	1-11
60	3	58.9	7- 0	1- 1	0- 8	5- 0	1- 0	19-10	70- 7	1-11
60	4	78.5	7- 0	1- 1	0- 8	5- 0	1- 0	19-10	81-10	1-11
60	5	98.1	7- 0	1- 1	0- 8	5- 0	1- 0	19-10	93- 1	1-11
60	6	117.7	7- 0	1- 1	0- 8	5- 0	1- 0	19-10	104- 4	1-11
66	1	23.7	7- 7	1- 2	0- 9	5- 2	1- 0	21- 5	52- 2	2- 0
66	2	47.5	7- 7	1- 2	0- 9	5- 2	1- 0	21- 5	64- 3	2- 0
66	3	71.2	7- 7	1- 2	0- 9	5- 2	1- 0	21- 5	76- 5	2- 0
66	4	95.0	7- 7	1- 2	0- 9	5- 2	1- 0	21- 5	88- 7	2- 0
66	5	118.7	7- 7	1- 2	0- 9	5- 2	1- 0	21- 5	100- 9	2- 0
66	6	142.5	7- 7	1- 2	0- 9	5- 2	1- 0	21- 5	112-10	2- 0
72	1	28.3	8- 2	1- 3	0- 9	5- 6	1- 0	23- 1	56- 4	2- 0
72	2	56.5	8- 2	1- 3	0- 9	5- 6	1- 0	23- 1	69- 3	2- 0
72	3	84.8	8- 2	1- 3	0- 9	5- 6	1- 0	23- 1	82- 3	2- 0
72	4	113.0	8- 2	1- 3	0- 9	5- 6	1- 0	23- 1	95- 2	2- 0
72	5	141.3	8- 2	1- 3	0- 9	5- 6	1- 0	23- 1	108- 2	2- 0
72	6	169.6	8- 2	1- 3	0- 9	5- 6	1- 0	23- 1	121- 2	2- 0
84	1	38.5	9- 4	1- 6	0-11	5-11	1- 0	26- 5	64- 7	3- 0
84	2	76.9	9- 4	1- 6	0-11	5-11	1- 0	26- 5	80- 8	3- 0
84	3	115.4	9- 4	1- 6	0-11	5-11	1- 0	26- 5	96- 8	3- 0
84	4	153.9	9- 4	1- 6	0-11	5-11	1- 0	26- 5	112- 9	3- 0
84	5	192.3	9- 4	1- 6	0-11	5-11	1- 0	26- 5	128- 9	3- 0
84	6	230.8	9- 4	1- 6	0-11	5-11	1- 0	26- 5	144-10	3- 0
96	1	50.2	10- 6	2- 0	1- 1	6- 4	1- 1	29- 8	72- 9	3- 0
96	2	100.5	10- 6	2- 0	1- 1	6- 4	1- 1	29- 8	90- 5	3- 0
96	3	150.7	10- 6	2- 0	1- 1	6- 4	1- 1	29- 8	108- 2	3- 0
96	4	201.0	10- 6	2- 0	1- 1	6- 4	1- 1	29- 8	125-10	3- 0
96	5	251.2	10- 6	2- 0	1- 1	6- 4	1- 1	29- 8	143- 6	3- 0
96	6	301.4	10- 6	2- 0	1- 1	6- 4	1- 1	29- 8	161- 2	3- 0
108	1	63.6	11- 8	2- 6	1- 2	6-10	1- 2	33- 0	81- 1	3- 0
108	2	127.2	11- 8	2- 6	1- 2	6-10	1- 2	33- 0	100- 5	3- 0
108	3	190.8	11- 8	2- 6	1- 2	6-10	1- 2	33- 0	119- 9	3- 0
108	4	254.3	11- 8	2- 6	1- 2	6-10	1- 2	33- 0	139- 1	3- 0
108	5	317.9	11- 8	2- 6	1- 2	6-10	1- 2	33- 0	158- 5	3- 0
108	6	381.5	11- 8	2- 6	1- 2	6-10	1- 2	33- 0	177- 9	3- 0
120	1	78.5	12-10	3- 0	1- 3	7- 4	1- 3	36- 4	89- 5	3- 0
120	2	157.0	12-10	3- 0	1- 3	7- 4	1- 3	36- 4	110- 5	3- 0
120	3	235.5	12-10	3- 0	1- 3	7- 4	1- 3	36- 4	131- 4	3- 0
120	4	314.0	12-10	3- 0	1- 3	7- 4	1- 3	36- 4	152- 4	3- 0
120	5	392.5	12-10	3- 0	1- 3	7- 4	1- 3	36- 4	173- 4	3- 0
120	6	471.0	12-10	3- 0	1- 3	7- 4	1- 3	36- 4	194- 4	3- 0
132	1	95.0	14- 0	3- 7	1- 5	7- 9	1- 5	39- 7	97- 7	3- 0
132	2	190.0	14- 0	3- 7	1- 5	7- 9	1- 5	39- 7	120- 2	3- 0
132	3	285.0	14- 0	3- 7	1- 5	7- 9	1- 5	39- 7	142-10	3- 0
132	4	379.9	14- 0	3- 7	1- 5	7- 9	1- 5	39- 7	165- 5	3- 0
132	5	474.9	14- 0	3- 7	1- 5	7- 9	1- 5	39- 7	188- 1	3- 0
132	6	569.9	14- 0	3- 7	1- 5	7- 9	1- 5	39- 7	210- 9	3- 0
144	1	113.0	15- 2	4- 2	1- 6	8- 3	1- 6	42-11	105-10	3- 0
144	2	226.1	15- 2	4- 2	1- 6	8- 3	1- 6	42-11	130- 2	3- 0
144	3	339.1	15- 2	4- 2	1- 6	8- 3	1- 6	42-11	154- 5	3- 0
144	4	452.2	15- 2	4- 2	1- 6	8- 3	1- 6	42-11	178- 9	3- 0
144	5	565.2	15- 2	4- 2	1- 6	8- 3	1- 6	42-11	203- 0	3- 0
144	6	678.2	15- 2	4- 2	1- 6	8- 3	1- 6	42-11	227- 3	3- 0

Dia. in.	No.	Bars E Size	Bars E No.	Bars E Lgth. ft.in.	Bars E Spc. in.	Bars E X ft.in.	Bars E Y in.	Bars E Z ft.in.	Bars E1 Size	Bars E1 No.	Bars E1 Lgth. ft.in.	Bars E1 Spc. in.	#4 Bars J No.	#4 Bars J Lgth. ft.in.	Bars O Size	Bars O No.	Bars O Lgth. ft.in.	Bars O Spc. in.
60	1	4	96	4- 6	5.0	1- 4	2	3- 0	4	48	5- 5	10.0	12	19- 6	4	73	6- 5	8.0
60	2	4	103	4- 6	5.0	1- 4	2	3- 0	4	52	5- 5	10.0	12	19- 6	4	90	6- 5	8.0
60	3	4	110	4- 6	5.0	1- 4	2	3- 0	4	56	5- 5	10.0	12	19- 6	4	106	6- 5	8.0
60	4	4	117	4- 6	5.0	1- 4	2	3- 0	4	60	5- 5	10.0	12	19- 6	4	123	6- 5	8.0
60	5	4	124	4- 6	5.0	1- 4	2	3- 0	4	64	5- 5	10.0	12	19- 6	4	140	6- 5	8.0
60	6	4	131	4- 6	5.0	1- 4	2	3- 0	4	68	5- 5	10.0	12	19- 6	4	157	6- 5	8.0
66	1	4	114	4-10	4.5	1- 6	2	3- 2	4	57	5-11	9.0	14	21- 1	4	90	6- 9	7.0
66	2	4	122	4-10	4.5	1- 6	2	3- 2	4	61	5-11	9.0	14	21- 1	4	111	6- 9	7.0
66	3	4	130	4-10	4.5	1- 6	2	3- 2	4	65	5-11	9.0	14	21- 1	4	131	6- 9	7.0
66	4	4	138	4-10	4.5	1- 6	2	3- 2	4	69	5-11	9.0	14	21- 1	4	152	6- 9	7.0
66	5	4	146	4-10	4.5	1- 6	2	3- 2	4	73	5-11	9.0	14	21- 1	4	173	6- 9	7.0
66	6	4	154	4-10	4.5	1- 6	2	3- 2	4	77	5-11	9.0	14	21- 1	4	194	6- 9	7.0
72	1	4	138	5- 0	4.0	1- 7	2	3- 3	4	69	6- 4	8.0	14	22- 9	4	123	7- 2	5.5
72	2	4	147	5- 0	4.0	1- 7	2	3- 3	4	74	6- 4	8.0	14	22- 9	4	151	7- 2	5.5
72	3	4	156	5- 0	4.0	1- 7	2	3- 3	4	79	6- 4	8.0	14	22- 9	4	180	7- 2	5.5
72	4	4	165	5- 0	4.0	1- 7	2	3- 3	4	84	6- 4	8.0	14	22- 9	4	208	7- 2	5.5
72	5	4	174	5- 0	4.0	1- 7	2	3- 3	4	89	6- 4	8.0	14	22- 9	4	236	7- 2	5.5
72	6	4	183	5- 0	4.0	1- 7	2	3- 3	4	94	6- 4	8.0	14	22- 9	4	265	7- 2	5.5
84	1	5	128	5-11	5.0	1-11	3	3- 9	5	64	7- 4	10.0	16	26- 1	4	172	8- 0	4.5
84	2	5	138	5-11	5.0	1-11	3	3- 9	5	70	7- 4	10.0	16	26- 1	4	215	8- 0	4.5
84	3	5	148	5-11	5.0	1-11	3	3- 9	5	76	7- 4	10.0	16	26- 1	4	258	8- 0	4.5
84	4	5	158	5-11	5.0	1-11	3	3- 9	5	82	7- 4	10.0	16	26- 1	4	301	8- 0	4.5
84	5	5	168	5-11	5.0	1-11	3	3- 9	5	88	7- 4	10.0	16	26- 1	4	343	8- 0	4.5
84	6	5	178	5-11	5.0	1-11	3	3- 9	5	94	7- 4	10.0	16	26- 1	4	386	8- 0	4.5
96	1	5	158	6-10	4.5	2- 7	3	4- 0	5	79	8- 3	9.0	18	29- 4	5	146	9- 1	6.0
96	2	5	169	6-10	4.5	2- 7	3	4- 0	5	85	8- 3	9.0	18	29- 4	5	181	9- 1	6.0
96	3	5	180	6-10	4.5	2- 7	3	4- 0	5	91	8- 3	9.0	18	29- 4	5	217	9- 1	6.0
96	4	5	191	6-10	4.5	2- 7	3	4- 0	5	97	8- 3	9.0	18	29- 4	5	252	9- 1	6.0
96	5	5	202	6-10	4.5	2- 7	3	4- 0	5	103	8- 3	9.0	18	29- 4	5	287	9- 1	6.0
96	6	5	213	6-10	4.5	2- 7	3	4- 0	5	109	8- 3	9.0	18	29- 4	5	323	9- 1	6.0
108	1	5	198	7- 9	4.0	3- 2	3	4- 4	5	99	9- 2	8.0	22	32- 8	5	195	10- 2	5.0
108	2	5	211	7- 9	4.0	3- 2	3	4- 4	5	106	9- 2	8.0	22	32- 8	5	241	10- 2	5.0
108	3	5	224	7- 9	4.0	3- 2	3	4- 4	5	113	9- 2	8.0	22	32- 8	5	288	10- 2	5.0
108	4	5	237	7- 9	4.0	3- 2	3	4- 4	5	120	9- 2	8.0	22	32- 8	5	334	10- 2	5.0
108	5	5	250	7- 9	4.0	3- 2	3	4- 4	5	127	9- 2	8.0	22	32- 8	5	380	10- 2	5.0
108	6	5	263	7- 9	4.0	3- 2	3	4- 4	5	134	9- 2	8.0	22	32- 8	5	427	10- 2	5.0
120	1	6	174	8-11	5.0	3- 9	4	4-11	6	87	10- 1	10.0	24	36- 0	5	239	11- 3	4.5
120	2	6	184	8-11	5.0	3- 9	4	4-11	6	93	10- 1	10.0	24	36- 0	5	295	11- 3	4.5
120	3	6	194	8-11	5.0	3- 9	4	4-11	6	99	10- 1	10.0	24	36- 0	5	350	11- 3	4.5
120	4	6	204	8-11	5.0	3- 9	4	4-11	6	105	10- 1	10.0	24	36- 0	5	406	11- 3	4.5
120	5	6	214	8-11	5.0	3- 9	4	4-11	6	111	10- 1	10.0	24	36- 0	5	462	11- 3	4.5
120	6	6	224	8-11	5.0	3- 9	4	4-11	6	117	10- 1	10.0	24	36- 0	5	518	11- 3	4.5
132	1	6	212	10- 1	4.5	4- 6	4	5- 4	6	106	11- 0	9.0	26	39- 3	5	260	12- 5	4.5
132	2	6	223	10- 1	4.5	4- 6	4	5- 4	6	112	11- 0	9.0	26	39- 3	5	321	12- 5	4.5
132	3	6	234	10- 1	4.5	4- 6	4	5- 4	6	118	11- 0	9.0	26	39- 3	5	381	12- 5	4.5
132	4	6	245	10- 1	4.5	4- 6	4	5- 4	6	124	11- 0	9.0	26	39- 3	5	441	12- 5	4.5
132	5	6	256	10- 1	4.5	4- 6	4	5- 4	6	130	11- 0	9.0	26	39- 3	5	502	12- 5	4.5
132	6	6	267	10- 1	4.5	4- 6	4	5- 4	6	136	11- 0	9.0	26	39- 3	5	562	12- 5	4.5
144	1	6	258	11- 1	4.0	5- 2	4	5- 7	6	129	12- 0	8.0	28	42- 7	5	318	13- 7	4.0
144	2	6	271	11- 1	4.0	5- 2	4	5- 7	6	136	12- 0	8.0	28	42- 7	5	391	13- 7	4.0
144	3	6	284	11- 1	4.0	5- 2	4	5- 7	6	143	12- 0	8.0	28	42- 7	5	463	13- 7	4.0
144	4	6	297	11- 1	4.0	5- 2	4	5- 7	6	150	12- 0	8.0	28	42- 7	5	536	13- 7	4.0
144	5	6	310	11- 1	4.0	5- 2	4	5- 7	6	157	12- 0	8.0	28	42- 7	5	609	13- 7	4.0
144	6	6	323	11- 1	4.0	5- 2	4	5- 7	6	164	12- 0	8.0	28	42- 7	5	682	13- 7	4.0

Dia. in.	No.	#4 Bars P No.	#4 Bars P Lgth. ft.in.	#4 Bars H No.	#4 Bars H Lgth. ft.in.	#4 Bars V No.	#4 Bars V Lgth. in.	Bars M Size	Bars M No.	Bars M Lgth. ft.in.	#4 Bars TH No.	#4 Bars TH Lgth. ft.in.	#4 Bars TH1 No.	#4 Bars TH1 Lgth. ft.in.	#4 Bars TV No.	#4 Bars TV Lgth. ft.in.	#4 Bars TV1 No.	#4 Bars TV1 Lgth. in.	Conc. CU. YDS.	Steel LBS.
60	1	11	47-10	0	0- 0	8	8	4	2	47-10	0	0- 0	0	0- 0	0	0- 0	0	0	20.72	1350
60	2	11	59- 1	6	2- 5	16	8	4	2	59- 1	0	0- 0	0	0- 0	0	0- 0	0	0	24.80	1569
60	3	11	70- 3	12	2- 5	24	8	4	2	70- 3	0	0- 0	0	0- 0	0	0- 0	0	0	28.84	1784
60	4	11	81- 6	18	2- 5	32	8	4	2	81- 6	0	0- 0	0	0- 0	0	0- 0	0	0	32.92	2003
60	5	11	92- 9	24	2- 5	40	8	4	2	92- 9	0	0- 0	0	0- 0	0	0- 0	0	0	37.01	2222
60	6	11	104- 0	30	2- 5	48	8	4	2	104- 0	0	0- 0	0	0- 0	0	0- 0	0	0	41.09	2442
66	1	11	51-10	0	0- 0	9	8	4	2	51-10	0	0- 0	0	0- 0	0	0- 0	0	0	24.78	1650
66	2	11	63-11	7	2- 6	18	8	4	2	63-11	0	0- 0	0	0- 0	0	0- 0	0	0	29.50	1907
66	3	11	76- 1	14	2- 6	27	8	4	2	76- 1	0	0- 0	0	0- 0	0	0- 0	0	0	34.25	2160
66	4	11	88- 3	21	2- 6	36	8	4	2	88- 3	0	0- 0	0	0- 0	0	0- 0	0	0	39.01	2418
66	5	11	100- 5	28	2- 6	45	8	4	2	100- 5	0	0- 0	0	0- 0	0	0- 0	0	0	43.77	2675
66	6	11	112- 6	35	2- 6	54	8	4	2	112- 6	0	0- 0	0	0- 0	0	0- 0	0	0	48.48	2932
72	1	11	56- 0	0	0- 0	9	8	4	2	56- 0	0	0- 0	0	0- 0	0	0- 0	0	0	28.41	2044
72	2	11	68-11	7	2- 6	18	8	4	2	68-11	0	0- 0	0	0- 0	0	0- 0	0	0	33.70	2357
72	3	11	81-11	14	2- 6	27	8	4	2	81-11	0	0- 0	0	0- 0	0	0- 0	0	0	39.03	2676
72	4	11	94-10	21	2- 6	36	8	4	2	94-10	0	0- 0	0	0- 0	0	0- 0	0	0	44.33	2989
72	5	11	107-10	28	2- 6	45	8	4	2	107-10	0	0- 0	0	0- 0	0	0- 0	0	0	49.66	3303
72	6	11	120-10	35	2- 6	54	8	4	2	120-10	0	0- 0	0	0- 0	0	0- 0	0	0	55.00	3621
84	1	12	64- 3	0	0- 0	11	8	5	4	64- 3	12	26- 1	0	0- 0	36	9- 0	7	8	39.57	3694
84	2	12	80- 4	8	3-11	22	8	5	4	80- 4	12	26- 1	6	3-11	40	9- 0	14	8	47.46	4296
84	3	12	96- 4	16	3-11	33	8	5	4	96- 4	12	26- 1	12	3-11	44	9- 0	21	8	55.29	4898
84	4	12	112- 5	24	3-11	44	8	5	4	112- 5	12	26- 1	18	3-11	48	9- 0	28	8	63.18	5500
84	5	12	128- 5	32	3-11	55	8	5	4	128- 5	12	26- 1	24	3-11	52	9- 0	35	8	71.02	6095
84	6	12	144- 6	40	3-11	66	8	5	4	144- 6	12	26- 1	30	3-11	56	9- 0	42	8	78.91	6698
96	1	14	72- 5	0	0- 0	13	8	6	4	72- 5	12	29- 4	0	0- 0	42	10- 2	8	8	55.96	5185
96	2	14	90- 1	9	3-11	26	8	6	4	90- 1	12	29- 4	6	3-11	46	10- 2	16	8	66.51	5994
96	3	14	107-10	18	3-11	39	8	6	4	107-10	12	29- 4	12	3-11	50	10- 2	24	8	77.13	6814
96	4	14	125- 6	27	3-11	52	8	6	4	125- 6	12	29- 4	18	3-11	54	10- 2	32	8	87.67	7623
96	5	14	143- 2	36	3-11	65	8	6	4	143- 2	12	29- 4	24	3-11	58	10- 2	40	8	98.22	8432
96	6	14	160-10	45	3-11	78	8	6	4	160-10	12	29- 4	30	3-11	62	10- 2	48	8	108.77	9250
108	1	16	80- 9	0	0- 0	14	8	6	4	80- 9	14	32- 8	0	0- 0	46	11- 4	9	8	74.08	7109
108	2	16	100- 1	11	3-11	28	8	6	4	100- 1	14	32- 8	7	3-11	50	11- 4	18	8	87.58	8180
108	3	16	119- 5	22	3-11	42	8	6	4	119- 5	14	32- 8	14	3-11	54	11- 4	27	8	101.09	9261
108	4	16	138- 9	33	3-11	56	8	6	4	138- 9	14	32- 8	21	3-11	58	11- 4	36	8	114.59	10331
108	5	16	158- 1	44	3-11	70	8	6	4	158- 1	14	32- 8	28	3-11	62	11- 4	45	8	128.10	11402
108	6	16	177- 5	55	3-11	84	8	6	4	177- 5	14	32- 8	35	3-11	66	11- 4	54	8	141.61	12483
120	1	18	89- 1	0	0- 0	16	8	6	4	89- 1	16	36- 0	0	0- 0	50	12- 6	10	8	95.73	9452
120	2	18	110- 1	12	3-11	32	8	6	4	110- 1	16	36- 0	8	3-11	54	12- 6	20	8	112.71	10811
120	3	18	131- 0	24	3-11	48	8	6	4	131- 0	16	36- 0	16	3-11	58	12- 6	30	8	129.59	12156
120	4	18	152- 0	36	3-11	64	8	6	4	152- 0	16	36- 0	24	3-11	62	12- 6	40	8	146.57	13514
120	5	18	173- 0	48	3-11	80	8	6	4	173- 0	16	36- 0	32	3-11	66	12- 6	50	8	163.55	14872
120	6	18	194- 0	60	3-11	96	8	6	4	194- 0	16	36- 0	40	3-11	70	12- 6	60	8	180.52	16230
132	1	20	97- 3	0	0- 0	18	8	6	4	97- 3	18	39- 3	0	0- 0	54	13- 8	11	8	128.69	11876
132	2	20	119-10	13	3-11	36	8	6	4	119-10	18	39- 3	9	3-11	58	13- 8	22	8	150.90	13476
132	3	20	142- 6	26	3-11	54	8	6	4	142- 6	18	39- 3	18	3-11	62	13- 8	33	8	173.24	15066
132	4	20	165- 1	39	3-11	72	8	6	4	165- 1	18	39- 3	27	3-11	66	13- 8	44	8	195.45	16653
132	5	20	187- 9	52	3-11	90	8	6	4	187- 9	18	39- 3	36	3-11	70	13- 8	55	8	217.79	18255
132	6	20	210- 5	65	3-11	108	8	6	4	210- 5	18	39- 3	45	3-11	74	13- 8	66	8	240.12	19845
144	1	22	105- 6	0	0- 0	19	8	6	4	105- 6	18	42- 7	0	0- 0	58	14-10	13	8	160.08	15211
144	2	22	129-10	14	3-11	38	8	6	4	129-10	18	42- 7	9	3-11	62	14-10	26	8	187.35	17207
144	3	22	154- 1	28	3-11	57	8	6	4	154- 1	18	42- 7	18	3-11	66	14-10	39	8	214.49	19186
144	4	22	178- 5	42	3-11	76	8	6	4	178- 5	18	42- 7	27	3-11	70	14-10	52	8	241.76	21181
144	5	22	202- 8	56	3-11	95	8	6	4	202- 8	18	42- 7	36	3-11	74	14-10	65	8	268.90	23175
144	6	22	226-11	70	3-11	114	8	6	4	226-11	18	42- 7	45	3-11	78	14-10	78	8	296.03	25168

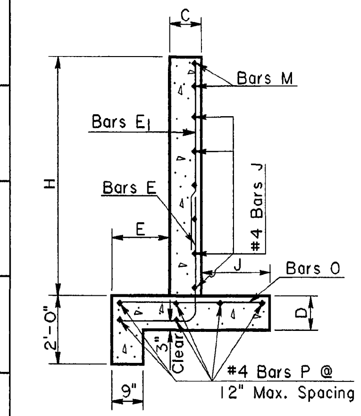

SECTION A-A

STEEL SHOWN IN BACK FACE OF WALL

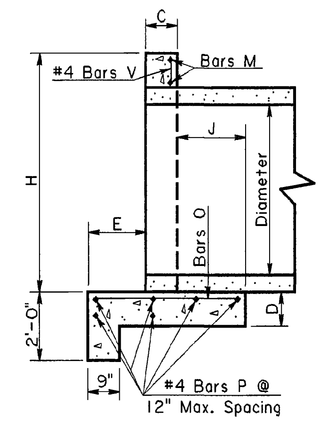

SECTION B-B

STEEL SHOWN IN BACK FACE OF WALL

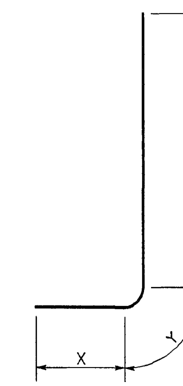

BARS E

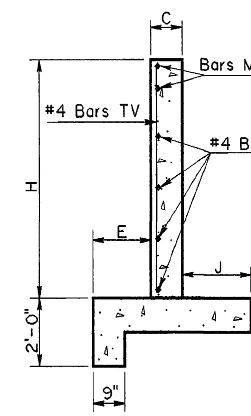

SECTION C-C

STEEL SHOWN IN FRONT FACE OF WALL

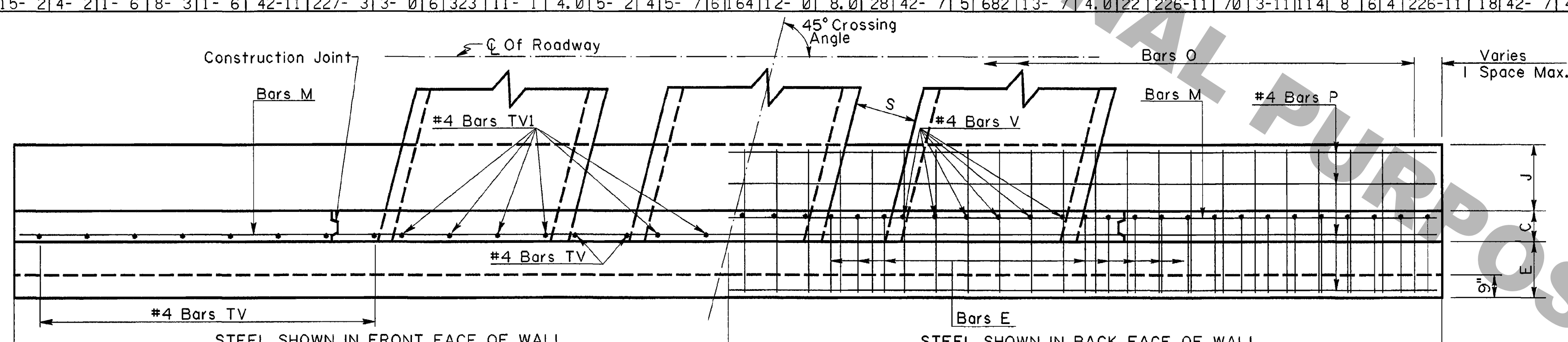

PLAN

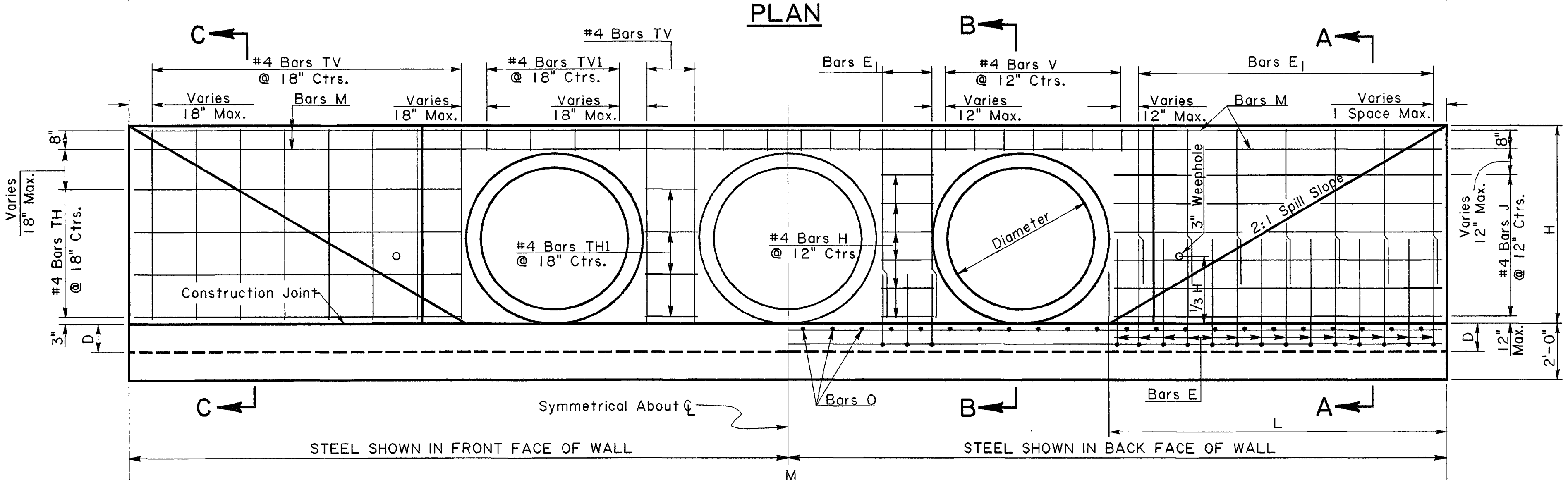

ELEVATION

GENERAL NOTES

DESIGN: Method- Headwalls are designed as retaining walls according to current AASHTO working stress procedures. Walls are designed for a lateral earth pressure of 40 psf with 2.0 feet of surcharge. Overturning- A minimum safety factor of 2.0 is provided against overturning. The resultant of loads is within the middle third of the footing. Sliding - A minimum safety factor of 1.5 is provided against sliding. The coefficient of friction between the footing and soil is 0.5. Foundation - The design soil bearing pressure is 1800 psf. When strength of the soil at the site is less than 1800 psf, bedding material shall be added under the footing as directed.

MATERIALS: Concrete- All concrete shall be class A. All exposed edges shall be ¾ inch chamfered. Reinforcing Steel- Reinforcement shall be Grade 60. Bar spacing dimensions are to bar centers. Steel required for lap splices not detailed shall not be measured for payment. Reinforcing steel shall have 2" cover unless otherwise specified. Steel and concrete quantities shown in table are for one headwall.

A 1'-6" square of geotextile fabric (see Section 1019 of the LA DOTD Standard Specifications) shall be placed in contact with concrete behind each weephole in addition to approximately 2 cu.ft. of concrete sand (see Section 1003.02 of the LA DOTD Standard Specifications).

CONSTRUCTION JOINTS: All construction joints shown are optional. For details of keyed construction joints see Standard Plan CM-49. For construction joints without key, the joint surface shall be roughened. Hardened surface shall be cleaned. Immediately before new concrete is placed, joint surface shall be saturated with water.

STATE OF LOUISIANA
WILLIAM M. RAY
REG. No. 24936
REGISTERED PROFESSIONAL ENGINEER
IN
CIVIL ENGINEERING
William M. Ray
1-26-01

FOR INFORMATIONAL PURPOSES ONLY

SPECIAL DETAIL NO. HW45RCP2 — SHEET 1 OF 1

STRAIGHT HEADWALL FOR RCP ON A 45° CROSSING 60" THRU 144"

DATED March 22, 1993

DATE	DESCRIPTION	BY
11-14-97	Revised General Notes And Assigned Name HW45RCP2	JCM

REVISIONS

STATE OF LOUISIANA
DEPARTMENT OF TRANSPORTATION AND DEVELOPMENT

DESIGNED PAA	DETAILED KAJ	DIR. spdetail/headwall/
CHECKED	CHECKED PAA	FILE HW45rcp.dgn

HYDRAULICS SECTION